Environment International 37 (2011) 517–531

Contents lists available at ScienceDirect

Environment International

journal homepage: www.elsevier.com/locate/envint

Review

Silver nanoparticles: Behaviour and effects in the aquatic environment

Julia Fabrega [a], Samuel N. Luoma [b], Charles R. Tyler [a], Tamara S. Galloway [a], Jamie R. Lead [c,*]

[a] School of Biosciences, Hatherly Laboratories, University of Exeter, Prince of Wales Road, Exeter, EX4 4PS, United Kingdom
[b] John Muir Institute of the Environment, University of California, One Shields Avenue, Davis, CA 95616, USA
[c] School of Geography, Earth and Environmental Sciences, University of Birmingham, Edgbaston, Birmingham, B15 2TT, United Kingdom

ARTICLE INFO

Article history:
Received 10 June 2010
Accepted 28 October 2010
Available online 14 December 2010

Keywords:
Marine
Freshwater
Fate
Ecotoxicology
Nanotechnology
Organisms

ABSTRACT

This review summarises and evaluates the present knowledge on the behaviour, the biological effects and the routes of uptake of silver nanoparticles (Ag NPs) to organisms, with considerations on the nanoparticle physicochemistry in the ecotoxicity testing systems used. Different types of Ag NP syntheses, characterisation techniques and predicted current and future concentrations in the environment are also outlined.

Rapid progress in this area has been made over the last few years, but there is still a critical lack of understanding of the need for characterisation and synthesis in environmental and ecotoxicological studies. Concentration and form of nanomaterials in the environment are difficult to quantify and methodological progress is needed, although sophisticated exposure models show that predicted environmental concentrations (PECs) for Ag NPs in different environmental compartments are at the range of ng L^{-1} to mg kg^{-1}. The ecotoxicological literature shows that concentrations of Ag NPs below the current and future PECs, as low as just a few ng L^{-1}, can affect prokaryotes, invertebrates and fish indicating a significant potential, though poorly characterised, risk to the environment. Mechanisms of toxicity are still poorly understood although it seems clear that in some cases nanoscale specific properties may cause biouptake and toxicity over and above that caused by the dissolved Ag ion.

This review concludes with a set of recommendations for the advancement of understanding of the role of nanoscale silver in environmental and ecotoxicological research.

© 2010 Elsevier Ltd. All rights reserved.

Contents

1. Introduction . . . 518
2. Ag NP synthesis and characterisation . . . 518
   2.1. Synthesis of silver nanoparticles . . . 519
   2.2. Characterisation of silver nanoparticles . . . 519
3. Release of silver nanoparticles into the environment . . . 520
4. Uptake and effects of Ag NPs . . . 521
   4.1. Bioaccumulation of silver nanoparticles in aquatic organisms . . . 521
      4.1.1. Mechanisms of bioaccumulation . . . 522
      4.1.2. What processes influence uptake rates and bioaccumulation of NPs? . . . 522
   4.2. Effects of Ag NPs to aquatic organisms . . . 523
      4.2.1. Toxicity to fish . . . 523
      4.2.2. Toxicity to invertebrates and algae . . . 526
      4.2.3. Toxicity to microbes . . . 527
   4.3. Physicochemistry and modes of action of Ag NP . . . 528
5. Conclusions and recommendations . . . 528
References . . . 529

* Corresponding author.
E-mail address: j.r.lead@bham.ac.uk (J.R. Lead).

0160-4120/$ – see front matter © 2010 Elsevier Ltd. All rights reserved.
doi:10.1016/j.envint.2010.10.012

1. Introduction

Nanotechnology manipulates matter at the nanoscale (1–100 nm) (Moore, 2006; Nel et al., 2006) producing nanoproducts and nanomaterials (NMs) that can have novel and size-related physico-chemical properties differing significantly from those from larger particles. The novel properties of NMs have been exploited widely for use in medicine (Barnett et al., 2007; Dong and Feng, 2007; Salata, 2004), cosmetics (Lens, 2009; Müller et al., 2002), renewable energies (Pavasupree et al., 2006; Wei et al., 2008), environmental remediation (Tungittiplakorn et al., 2004; Zhang, 2003), and electronic devices (Kachynski et al., 2008).

There are many consumer products and applications utilising Ag NPs. The Woodrow Wilson Database (http://www.nanotechproject.org), although not exhaustive, has listed 1015 consumer products presently on the market incorporating NPs, with 259 containing Ag NPs (May 2010, Table 1), exploiting their strongly bactericidal action and making Ag NPs the largest and fastest growing class of NMs in product applications.

Ag NPs have distinctive physico-chemical properties, including a high electrical and thermal conductivity, surface-enhanced Raman scattering, chemical stability, catalytic activity and non-linear optical behaviour (Capek, 2004; Frattini et al., 2005). These properties make them of potential value in inks (Perelaer et al., 2009; Tay and Edirisinghe, 2002), microelectronics (Wu et al., 2006), and medical imaging (Jain et al., 2008). However, it is the exceptional broad spectrum bacteriocidal activity of silver (Luoma, 2008; Ratte, 1999; Silver, 2003; Silver et al., 2005) and relatively low cost of manufacturing of Ag NPs (Capek, 2004), that has made them extremely popular in a diverse range of consumer materials, including plastics, soaps, pastes, metals and textiles (Frattini et al., 2005) increasing their market value.

Prior to the development and use of Ag NPs in goods, the majority of silver occurring in surface waters originated from natural leaching, mining and the photographic industry (Purcell and Peters, 1998), with measured concentrations in natural and contaminated waters in the ng L^{-1} range (Sanudo-Willhelmy and Flegal, 1992). Concentrations of silver in at least some surface waters have decreased since peak levels in the 1970s due to the decline in the use of Ag in the photographic industry and more stringent environmental regulations (Luoma, 2008; Purcell and Peters, 1998). In the 1970s it was estimated that ca. 2.5 million kg of Ag were discharged into the environment in the United States alone.

Silver is considered relatively harmless to humans. Indeed, silver's bactericidal properties have been exploited by certain groups commercialising colloidal silver suspensions as 'health supplements'. However, the beneficial effects on health are not proven, and high exposures to silver compounds can cause argyria, an irreversible condition in which the deposition of Ag in the body tissue results in the skin turning bluish in colour (Hill, 1941; Rosenman et al., 1979). In addition, there is a potential impact on gut microflora affecting the population size of certain types of bacteria (Sawosz et al., 2007). Dissolved silver ions in the environment, however, are persistent and highly toxic to prokaryotes and many freshwater and marine invertebrates and fish (Bianchini et al., 2002; Erickson et al., 1998; Fisher and Wang, 1998; Hogstrand and Wood, 1998). Silver ions have a great propensity to bioconcentrate in organisms, since the chemical properties of the Ag ions make them compatible for uptake via cell membrane ion transporters, similar to those regulating Na^+ and Cu^+ ion transport into cells (Luoma, 2008). For this reason, silver is listed in the 1977 US EPA priority pollutant list and in the EEC 1976 Dangerous Substance Directive List II (76/464/EEC), and this has led to the regulation of silver discharges.

Table 1
Major products in the market containing Ag NPs (from Woodrow Wilson Database, March 2010).

Nano-Ag containing products	Percentage
Creams and cosmetics items	32.4
Health supplements	4.1
Textiles and clothing	18.0
Air and water filters	12.3
Household items	16.4
Detergents	8.2
Others	8.6

Currently, there is no evidence to suggest that humans are being adversely affected by Ag NPs through their use in consumer products, but Ag NP-containing products are likely to result in dissolved silver and Ag NP releases into the environment (Benn and Westerhoff, 2008; Geranio et al., 2009; Gottschalk et al., 2009; WoodrowWilson, 2009), which are likely to persist and bioaccumulate.

The environmental impacts of Ag NPs are, as yet, unknown. However, previous knowledge on the environmental and physiological implications of exposure to dissolved silver ions and silver salts in freshwater and seawater organisms provides a baseline for assessment and a reason for concern; from this baseline the potential effects and impacts of Ag NPs to organisms and to ecosystems can be developed. Prior to the interest in NPs, the silver ion (Ag^+(aq)) was considered the most toxic form of silver in water (Ratte, 1999). As with all metals, the chemistry of the surrounding environment affects association of silver ions with various ligands, in turn influencing bioavailability and toxicity (Adams and Kramer, 1998; Erickson et al., 1998; Luoma et al., 1995). For instance, in freshwater systems organic matter and sulfide, with a high silver affinity, probably dominate Ag speciation and reduce silver bioavailability. In seawater systems the silver chloro complex is highly bioavailable and it is the primary form in waters of salinity greater than about 3 (Luoma, 2008; Luoma et al., 1995). The uptake rates of the chloro complexes by fish are not as rapid as with the free Ag ion, but concentrations of chloro complexes are much higher than free Ag ion concentrations in most aquatic systems. Thus marine organisms are more likely to bioaccumulate Ag than freshwater organisms (Luoma, 2008), under equivalently contaminated conditions.

Due to the complexity of silver metal speciation in waters of different chemistry, and thus the difficulty of empirically testing all scenarios, biological modelling approaches were developed, including the Free Ion Activity Model (FIAM) and the Biotic Ligand Model (BLM), for potentially predicting acute metal toxicity to aquatic vertebrates and invertebrates (Bianchini and Wood, 2008; De Schamphelaere and Janssen, 2004; Ward and Kramer, 2002). Both, the FIAM and BLM are equilibrium-based chemical models, and as such contain assumptions which may not always be justified in real situations (Slaveykova and Wilkinson, 2005). Despite limitations, the BLM is now used as a regulatory tool in the US, replacing empirical measures of the effects of water chemistry on toxicity of dissolved metals. There is a potential for application of these models to NPs but this will require further experimental and modelling development. For instance it is not yet clear how fundamental assumptions in the FIAM and BLM apply to NP's, like the dominance of free ion activities in determining bioavailability as well as the assumption that aqueous phase chemistry is at equilibrium and that uptake and flux across the membrane is rate limiting.

The purpose of this review is to critically evaluate the existing knowledge on Ag NPs as a potential problem for environmental health, taking into consideration the characteristics, behaviour, bioavailability and biological effects of Ag NPs in aqueous suspensions. From the current information on Ag NPs and their role in the environment, we then identify and prioritise key current knowledge gaps.

2. Ag NP synthesis and characterisation

One of the main bottlenecks for more fundamental understanding of the hazards and risks of all NPs, including Ag NPs, is the lack of well

controlled and tightly constrained batches of NPs. In such well defined NP batches, material properties such as size, surface chemistry, crystallinity, and dissolution can be controlled and used as experimental variables, or monitored and characterised (see next section). Most data produced to date in environmental and ecotoxicological studies (Handy et al., 2008; Klaine et al., 2008; Nel et al., 2009) employ NPs which are not constrained in this way, making data interpretation and generalizations difficult. Such poorly constrained NPs have a different, but still important, role as they are relevant to the NPs currently produced and used in consumer goods. For instance, the OECD programme on nanomaterials safety assessment aims to produce a panel of 14 such test materials (including Ag NPs). These two strands of research using fundamentally different NP types are both required to improve our knowledge of environmental hazards and risks to NPs.

2.1. Synthesis of silver nanoparticles

There are several physical and chemical methods used for the manufacturing of NPs which aim to give reproducible batches of stable suspensions, with NPs of a homogeneous shape, narrow size distribution and other properties (Yu, 2007). Such materials can then be used as reference materials in detailed studies, which might form the basis of, for instance, quantitative structure–activity relationship (QSAR) models; QSARs could prove to be highly valuable, especially as regulatory tools. Nevertheless, such manufacture is not easy and the control required for adequate hazard and fate studies is different to, and frequently exceeds that required for material and technological applications.

The colloidal chemical reduction of silver salts is a frequently used method of manufacturing Ag NPs and is our method of choice for environmentally related studies for the reasons given later. The chemical reduction of Ag salts works by reducing Ag ions with borohydride, citrate, ascorbate or other reductant, forming silver atoms (Ag^0), which then agglomerate into oligomeric clusters that become colloidal Ag NPs (Kapoor et al., 1994; Sharma et al., 2009). Size, morphology, stability and properties of NPs are influenced considerably by experimental conditions such as the kinetics of interaction with the reducing agent and absorption of stabilising agents onto the NP (Sharma et al., 2009). A particle stabiliser, or capping agent, is often present in the suspension during synthesis which helps reduce particle growth, aggregation and controls shape allowing further manipulation and functionalisation of the NP surface. Traditional aqueous colloidal synthesis of Ag NPs via citrate and borohydride reduction of Ag(I) salts (Callegari et al., 2003), or more recently PVP or PEG reduction and stabilisation (Huang et al., 1996; Luo et al., 2005), has several advantages. In colloidal aqueous synthesis, particles are always kept in suspension, reducing aggregation, and contain few additives, simplifying toxicological interpretation. Synthesis in organic solvents (Pastoriza-Santos and Liz-Marzan, 2002) often gives better control of synthesis but may leave contaminants making interpretation of hazard data more problematic. High temperature or top down manufacturing methods typically result in powders, but provide less control on relevant toxicologically important parameters, such as particle size and shape.

During Ag NP synthesis, size and aggregation are controlled by stabilisation which is performed by steric, electrostatic or electrosteric repulsion, which are reviewed in detail in Christian (2009). In the case of charge based stabilisation of NPs, charge based repulsion overcomes the attractive short range van der Waals forces which cause aggregation. Indeed, dispersion depends on the solution ionic strength and other solution conditions, and can be predicted by existing theory (Baalousha, 2009; Handy et al., 2008). Steric stabilisation is far more poorly understood, with no overarching quantitative theory applicable and dispersion is less dependent on external solution conditions. The synthesis method strongly affects the behaviour of NPs, and the nature of the stabilisation and strength of binding between organic capping agents and core material are likely to be key parameters in determining toxicity. Toxicology media may contain high salt concentrations and often other materials such as proteins which affect particle behaviour. Environmental media, similarly, may vary in ionic strength and pH, as well as concentrations of natural organic macromolecules (NOM). Steric stabilisation, has a potentially large role in applications of nanoscience, e.g. in nanomedicine (Boyer et al., 2010), and as such these types of NPs are likely to be a focus of research and development, possibly leading to increased environmental transport. However, such exposure is likely to be relatively limited at present.

In recent years, and in order to avoid the use of potential toxic capping agents that could also modify the nature of the metal NP, more environmentally friendly biosynthetic processes i.e. green synthesis of Ag NPs, have been investigated (Bar et al., 2009; Vigneshwaran et al., 2007), in which nucleation and growth are mostly controlled by proteins and macromolecules that also help prevent aggregation. Indeed, Ag NPs can be synthesised by fungi such as *Phoma glomerata* (Birla et al., 2009), *Fusarium acuminatum* (Ingle et al., 2008), *Aspergillus flavus* (Vigneshwaran et al., 2007), or *Fusarium oxysporum* (Ahmad et al., 2003; Duran et al., 2005) by reducing metal salts extracellularly and generating long term stable Ag NPs in water.

Fundamental for advancing our knowledge on Ag NP toxicity in the aquatic environment is an understanding of the physico-chemical properties of NPs employed in products, in toxicological exposure media and found in the environment. Thus, the provision of well characterised Ag NPs for controlled (eco-) toxicity testing and environmental studies is essential for developing a standardised approach for assessing NP fate, behaviour and biological effects, and thus hazard assessment, as discussed later.

2.2. Characterisation of silver nanoparticles

To date, most studies on Ag NPs have used commercially available materials with limited characterisation on the stock suspensions, sometimes with unidentified capping agents, with little knowledge of potential impurities or stability. Information on relevant characteristics such as size distribution, aggregation (kinetics, mechanisms, aggregate structure and sizes), surface properties (charge, chemistry, specific area, etc), morphology (shape, crystal structure and purity), dissolution rate and solubility is necessary over relevant exposure periods.

Characterisation is critical to accurately determining dose (Oberdorster et al., 2005), defined as 'the amount of a particular agent that reaches a target organisms, a system or (sub-) population in a specific frequency for a defined duration' (Leeuwen et al., 2007). Mass is the critical measure of dose in traditional toxicology, but for NPs the number of particles or the total surface area of all particles could be important. These different expressions of dose cannot be determined on uncharacterised particles. In addition, comparison between studies and generalizations that allow further use of data are difficult without understanding the characteristics of the Ag NPs. Furthermore, for detailed (eco-) toxicological studies, correct comparison of silver metal in different forms (dissolved, nanoparticle, 'bulk' particles) is crucial for defining a nanoparticle's mode of action and understanding hazard issues. Dissolved silver speciation and bulk particle characteristics also need quantification.

The need for characterisation in all media is demonstrated, for example, by extensive change in aggregation state caused by addition of biological media with changes potentially caused by pH, ionic strength, specific counter-ions (Ca and Mg), polysaccharides and proteins (Bradford et al., 2009; Fabrega et al., 2009a; Jiang et al., 2009; Sondi and Salopek-Sondi, 2004). Indeed, in high ionic strength suspensions, charge stabilised Ag NPs tend to precipitate and sediment within a few hours of exposure, and accumulate in the

uppermost sediment layer in aquatic systems (Bradford et al., 2009). Laboratory studies have shown that less of 5% of the originally added mass of NPs may be retained in the water column and available to pelagic species (Griffitt et al., 2009). In such systems, changes occur in exposure route, dose (loss of material) and nature of the toxicant (dispersed to aggregated form). As an example, Ag NP behaviour has been monitored during laboratory exposures to planktonic and surface associated bacteria, with significant changes in aggregation, surface chemistry, toxicity and bioaccumulation over relevant conditions of pH and presence of NOM (Fabrega et al., 2009a,b). Interactions between NPs and NOM or biological macromolecules e.g. proteins, are known and strongly affect the NP surface chemistry (Cedervall et al., 2007; Lundqvist et al., 2008) and bioaccumulation (Fabrega et al., 2009b).

Given the previously mentioned complexities, physical and chemical characterisation of NPs in suspensions is a difficult task, although there are a variety of analytical and metrological techniques available (Hassellov et al., 2008; Tiede et al., 2009; Wigginton et al., 2007) (Table 2), which can in principle measure all relevant parameters. Nevertheless, the time and resource requirements for characterisation are usually under-appreciated and there is a lack of co-located or collaborative expertise in both environmental/ecotoxicological and metrology/analysis (Alvarez et al., 2009) meaning that logistical challenges are not insignificant. A further limitation on characterisation is that most relevant methods work optimally or only in ultra high vacuum (UHV) or on simple, monodisperse systems. As such, a multi-method approach is recommended (Domingos et al., 2009), which should be as exhaustive as possible; i.e. drawing upon a wide range of methodologies to define the important parameters for NPs, such as size, shape, aggregate state, solubility, and binding capacities to macromolecules and other organic material. NP properties should ideally be quantified over exposure periods in ecotoxicology experiments, in order to establish the causes and mode of toxicity of the NPs, and over relevant time periods for environmental chemistry and transport studies.

3. Release of silver nanoparticles into the environment

Worldwide, the present production of Ag NP is estimated at about 500 t/a (Mueller and Nowack, 2008), and a steady increase on the volume manufactured is predicted for the next few years (Boxall et al., 2008). Ag NPs may be discharged to the environment by several routes, including during synthesis, during manufacturing and incorporation of the NPs into goods, during the use phase of the good containing NPs, and while recycling or disposal of goods and Ag NPs (Köhler et al., 2008). In 2008, a study analysing the risk from the release of Ag NPs to freshwater ecosystems predicted that by 2010, 15% of the total silver released into water in the European Union would come from biocidal plastics and textiles (Blaser et al., 2008). Once in the waste stream, the majority (by mass) of discharged Ag NPs may partition into sewage sludge, if advanced waste treatments are available (Blaser et al., 2008). In countries such as the UK and USA, a large proportion of the annually produced sewage sludge is used as a fertiliser in agricultural soil (Nicholson et al., 2003), although other countries incinerate such waste (Gottschalk et al., 2009). The exact disposal route will strongly affect the amount of Ag NPs that each environmental compartment receives.

Despite the modelling studies, there are few experimental data reporting partitioning between and within environmental compartments by NP mass and none by particle number, or even how partitioning might differ between discharges that are primarily Ag NP vs. Ag itself. However, there are data showing that manufactured nanomaterials used in consumer goods will accumulate in surface waters (Benn and Westerhoff, 2008; Kaegi et al., 2008) (Table 3). Modelled and experimental data (Geranio et al., 2009; Gottschalk et al., 2009; Luoma, 2008; Mueller and Nowack, 2008) suggest that ng L^{-1} may be present in surface waters and exponential increases are predicted due to the increase usage and consequently discharge levels. However, the lack of experimental validation means that these numbers should be treated with considerable caution.

Table 2
Methods for analysis and classification of NMs (modified from Hassellov et al., 2008 and Wigginton et al, 2007). CFUC: cross-flow ultrafiltration, Sed-FFF: sedimentation field-flow fractionation, Flow-FFF: flow field-flow fractionation, EM: electron microscopy, AFM: atomic force microscopy, ICP-MS: inductively coupled plasma mass spectrometry, ICP-OES: inductively couple plasma optical emission spectrometry, AAS: atomic absorbance spectrometry, EDX: energy-dispersive X-ray spectroscopy, EELS: electron energy-loss spectroscopy, DLS: dynamic light scattering, XRD: X ray diffraction.

	Instrument and method	Parameter measured	Limitations	Advantages
Separation	CFUF	Size	Concentrated samples (<5–10 times). Low sample resolution	Low sample perturbation
	Sed-FFF	Buoyant mass	Only applicable to particles>50 nm. Generally requires a pre-concentration step. NP-membrane interactions	Good recovery of sample. Non-destructive. High size resolution
	Flow-FFF	Diffusion coefficient	Generally requires a pre-concentration step. NP-membrane interactions	Wide size range separation. Fast, non-destructive. High size resolution
	Centrifugation	Sed. coefficient	Low size resolution	Low sample perturbation.
	Ultrafiltration	Size	Binding with UF membrane, aggregation. Poor size resolution	Low sample perturbation. Quick and little sample preparation
Microscopy	EM	Size, shape and aggregation	Artifacts due to sample preparation	High resolution. 3D images
	AFM	Size, shape and aggregation	Poor lateral accuracy	High resolution
Spectroscopy	ICP-MS, ICP-OES, AAS	Total elemental composition in bulk	Limited NP information	Multiple metal analyses. Possibility for hyphenation
	EDX	Semi-quantitative elemental composition for single particles	Semi-quantitative information	Accurate and fast. Single particle elemental information
	EELS	Elemental and chemical information	Time consuming	Single particle chemical information
	FCS	Diffusion coefficient and chemical kinetics	Fluorescent material only	Non perturbing, sensitive, spatially resolved
Others	DLS	Hydrodynamic diameter	Size biased towards large particles	Fast. Gives an indication of the aggregation state
	BET	Specific surface area/porosity	Artifacts due to sample preparation	High precision. Direct measure of surface area
	Capillary electrophoresis	Electrophoretic mobility	High concentration required	Direct data on charge
	XRD	Crystal structure and crystallite size	Powdered samples. Artifacts due to sample preparation	Detailed crystallographic information

Table 3
Predicted environmental concentrations (PECs) shown as mode (most frequent value) and risk quotients (PEC/PNEC, where PNEC is predicted no effect concentration) for Europe and the US for different environmental compartments (base year 2008, modified from Gottschalk et al., 2009).

	Europe		U.S.	
	Concentration (mode value)	Risk quotient (RQ)	Concentration (mode value)	Risk quotient (RQ)
Soil	22.7		8.3	
Sludge treated soil	1581		662	
Surface water	0.7	1.1	0.1	0.2
STP effluent	42.5	61.1	21.0	30.1
STP sludge	1.7		1.6	
Sediment	952		195	
Air	0.008	<0.0005	0.002	<0.0005

Modelling approaches provide starting points for predicting if the life cycle of Ag NP-containing products and how release and accumulation of Ag compounds in the environment may occur and at what concentrations. Suggested contributions of Ag NPs to the environment from a variety of consumer goods are illustrated in Fig. 1 (Gottschalk et al., 2009). The use of probabilistic methods for determining PECs in Europe and in the US, based on the life cycle perspective of products containing NMs, shows current predicted environmental concentrations in Europe with lower and upper quartiles ($Q_{0.15}$ and $Q_{0.85}$) of 0.5−2 ng L^{-1} in surface waters, 32–111 ng L^{-1} in sewage treatment plant effluents, and 1.3–4.4 mg kg^{-1} in sewage sludge (Gottschalk et al., 2009), with predicted exponential yearly increase of Ag NP in most environmental compartments (Gottschalk et al., 2009; Mueller and Nowack, 2008) (Table 3). Again, there is a lack of data to validate such model predictions.

It remains extremely difficult to estimate the current production, release and flow coefficients of Ag NPs into the environment (Mueller and Nowack, 2008), since there is no full inventory of NM-containing products, no monitoring and little information on transport. However, if the use of silver nanotechnologies becomes widespread, it is feasible that silver concentrations in nature could increase locally and regionally to mass concentrations which could equal or exceed peak levels of dissolved silver observed in contaminated waters historically (Luoma, 2008), which would exacerbate concerns about ecological risks (Luoma and Rainbow, 2008).

A major bottleneck in environmental exposure modelling of Ag NPs is the lack of analytical and *in situ* techniques and instruments, that can detect, quantify and characterise Ag NPs (or indeed any NP) in complex environmental or biological media at ambient levels. A multi-method approach, combining sophisticated methods such as hyphenated FlFFF-ICPMS (flow field-flow fraction and inductively coupled plasma spectrometry) (Hassellov et al., 2008) and electron microscopy (Kaegi et al., 2008) is potentially the most promising approach to determine the presence of nanoparticulate metals in natural aqueous samples. Another challenge is that any useful methodology must be able to detect Ag NPs at the very low concentrations mentioned earlier.

4. Uptake and effects of Ag NPs

4.1. Bioaccumulation of silver nanoparticles in aquatic organisms

Bioaccumulation is an important process to understand when evaluating hazard and risks from Ag NPs. Risk assessment requires consideration of both exposure and effects because exposure and subsequent bioaccumulation of a xenobiotic is usually a precursor to toxicity (i.e. the chemical must be retained by the organism before it

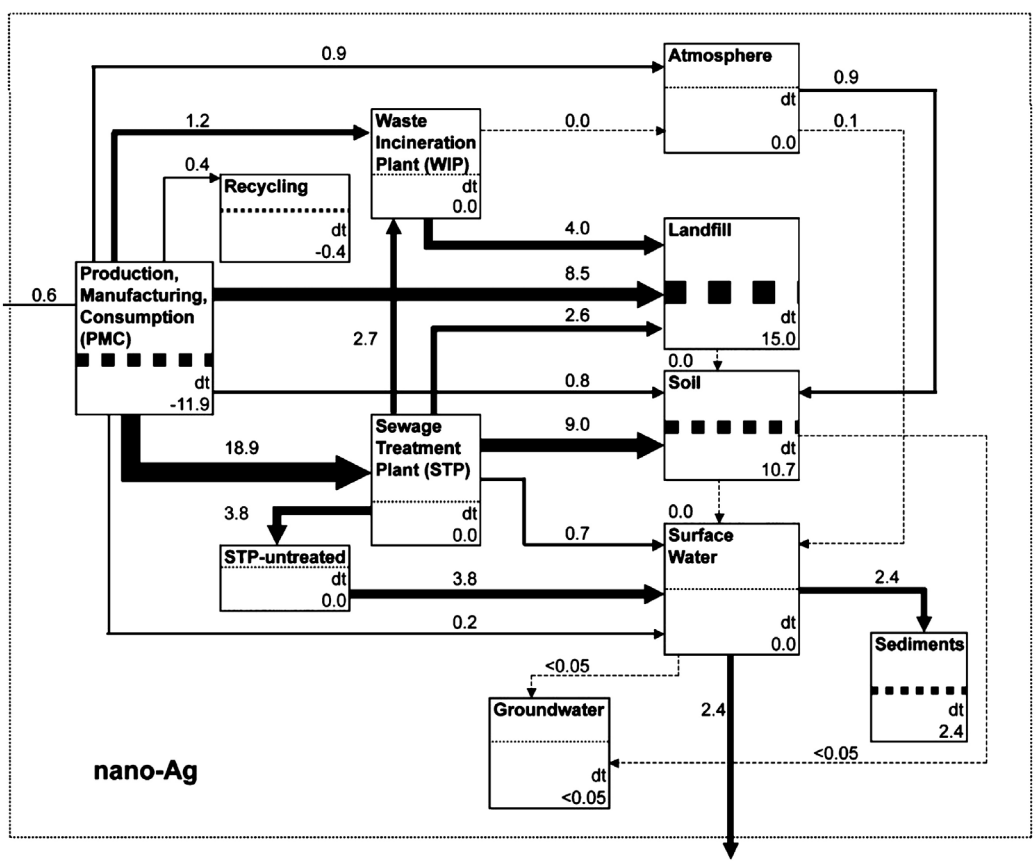

Fig. 1. Diagram of simulation results (mode values>0.0005 t/a) of Ag NPs for the United States in t/year. The thickness of the arrows indicates the proportions of the Ag NP flows, the thickness of the horizontal line within the compartments and the proportional magnitude of the removal or accumulation. From Gottschalk et al., 2009.

can cause toxicity; Luoma and Rainbow, 2008). Nanoparticles containing Ag are unlikely to be an exception to this generalization. Bioaccumulation is also a direct way to evaluate the processes that influence bioavailability, where bioavailability is defined as the pollutant concentration that an organism takes up from environmental media, summed across all possible pathways of uptake, including water and food (Luoma and Rainbow, 2005). The long history of studying effects of xenobiotics teaches us that understanding and regulating environmental exposures to potential toxicants requires consideration of bioavailability.

4.1.1. Mechanisms of bioaccumulation

The most basic question about bioaccumulation and bioavailability is whether the nanoparticle can either penetrate into the organism or be retained at the external surfaces where it can cause damage. Some life forms (plants, bacteria, and fungi) are surrounded by cell walls which are semipermeable. Small molecules can pass through the cell wall but larger molecules cannot. In the absence of specific cell wall damage caused by the NPs, Ag NP and Ag NP aggregates that are smaller than the largest pore will pass through the cell wall and reach the plasma membrane. Semi-permeable membranes also protect some life forms of higher animals; for example the chorion that surrounds embryos of vertebrates. Lee et al. (2007) used TEM images to show citrate capped Ag NPs passing through the pores of the chorion in zebrafish embryos. Uptake by bacteria has also been shown by TEM demonstrating the feasibility of Ag NP penetration through living semi-permeable membranes (Fabrega et al., 2009b; Xu et al., 2004).

The cells of all living organisms are surrounded by a lipid plasma membrane enclosing the cytoplasm that contains the cell machinery (the plasma membrane lies inside the cell wall in organisms that possess the latter). The plasma membrane is actually a complex system that limits the entry of many materials into the cells but has structures and mechanisms, such as pores and protein carriers that promote translocation of other materials into and/or across the membrane. One process likely to translocate intact nanoparticles is endocytosis (Moore, 2006), wherein uptake of molecules or particles between 1 and 100 nm in size occurs by the invagination of the plasma membrane, the formation of vesicles that enclose the material and the transport of the vesicle into cell. Moore (2006) showed that polystyrene NPs could be taken up by endocytosis in marine mussels (*Mytilus edulis*), demonstrating the feasibility of uptake via this route. The potential rate of uptake via endocytosis is not known, compared to other routes of translocation across the membrane. If endocytosis dominates Ag NP uptake, models that rely on the assumption that free ion uptake dominates metal bioavailability (like the FIAM and BLM described earlier) will be irrelevant to NPs in their current state. A second possibility is the association of the Ag NP with the surface of the membrane and the release of free metal ions within the surface layers. If Ag NPs represent packets of Ag^0 solids, Ag^+, and adsorbed Ag (Liu and Hurt, 2010) then dissolution of that packet within the superficial microlayer of the membrane could create nano-environments of very high Ag^+ concentration, conducive for rapid uptake of the ion. It could be argued that such a situation is unprecedented in the evolutionary exposure of organisms to trace metals and would also create a circumstance that is outside the predictive powers of the models that describe dissolved trace metal bioavailability. In such a case, the hazard may indeed be from the metal ion, but the nanoparticle creates novel circumstances for delivery to the cell that enhances ionic uptake. To date, none of these potential mechanisms has been demonstrated, unequivocally, for Ag NPs, partly because of the technical challenges of both imaging and quantifying Ag NPs at or within the membrane of an organism. For example, Lee et al. (2007) could image uptake through the pores of the zebrafish chorion but could not find visual evidence of Ag NPs crossing the plasma membrane into zebrafish embryos, even though the Ag NPs did appear to be present within the developing organs of the embryo.

4.1.2. What processes influence uptake rates and bioaccumulation of NPs?

In the broadest of terms the most important influences in determining the degree of bioaccumulation (and ultimately toxicity) of Ag NPs are probably similar to the influences important for chemicals like metal contaminants. Bioaccumulation by an organism will be determined by the balance between the rate of uptake, summed across sources, and the rate of loss and dilution by growth (Sharpe and Mackay, 2000; Veltman et al., 2008). The most dangerous chemicals are often those that are taken up rapidly from some source and then retained within cells. Uptake rate from any source will vary as a function of bioavailable concentration and the resultant bioaccumulation will be influenced by both the rate and the time of exposure (Luoma, 1983; Wang and Fisher, 1999).

The processes that govern bioavailability, and thus bioaccumulation of Ag NP in any given circumstance are likely to be the result of the combined influences of Luoma and Rainbow (2005):

1) concentration of the Ag NP,
2) the nature of the nanoparticle,
3) the nature of the environment,
4) the route of exposure, and
5) the biology and functional ecology of the organism involved.

Luoma and Rainbow (2005) showed that models are necessary to incorporate the inter-connections among these influences for trace metal contaminants, and demonstrated the suitability of biodynamic modelling for those purposes. The fundamental requirements for such a model include experiments that determine uptake rate as a function of concentration in water and as a function of concentration in food as well as rate constants of loss. From these parameters bioaccumulation can be predicted for a) the species under study, b) the contaminant of interest (e.g. a specific formulation of a silver nanoparticle) and c) the environmental conditions of the study.

It can be argued that the limited number of ecotoxicity studies with Ag NPs have been carried out at concentrations that are much higher than would ever be expected in the environment (Navarro et al., 2008a), and over time periods much shorter than would be typical in an environmental situation. At least with metals, and likely with metal NPs like Ag NP, characterisation of species- and circumstance-specific rates of uptake and loss allow a methodology to overcome such compromises (e.g. Croteau et al., 2010), especially in addressing fundamental questions associated with bioavailability. The biodynamic approach also allows systematic quantification of the influence of the different processes that affect bioaccumulation of NPs. For example, a number of papers have shown that bioaccumulation of metals from water and food can be quantitatively compared at environmentally realistic concentrations (Luoma and Fisher, 1997; Wang et al., 1996). Study of bioaccumulation resulting feeding on nanoparticles is just beginning (Croteau et al., 2010; Dybowska et al., 2011); but the basic metal methodologies were shown to be useful.

4.1.2.1. Characteristics of the nanoparticle. As noted earlier, the bioavailability and bioaccumulation of Ag NPs by all organisms are likely to be dependent on the size, shape, chemical composition, charge, surface structure and area, solubility, and aggregation state of the particle or material (Navarro et al., 2008a). Some of these properties may change in different media. Ag NPs used in commercial products are likely to be coated with organic compounds to promote their dispersion, including citrate, cysteine, polyethylene glycol or starch. These functional groups (or capping agents) could themselves influence membrane translocation (e.g. metal citrates are taken up across membranes (Campbell, 1995)) or influence properties of the nanoparticle that influence bioavailability. Systematic, quantitative comparisons of the influence of different particle characteristics on Ag NP bioavailability, as defined by uptake or loss rate constants, are not yet available for any type of living organism. But the usefulness of the

biodynamic approach in addressing such questions has been demonstrated for other nanoparticles, addressing questions for a species of interest such as what are the differences in uptake rates of ionic and nanoparticulate metal under similar environmental conditions (Croteau et al., 2010). Differences in uptake rates have also been addressed under different water chemistry regimes (e.g. Navarro et al., 2008a). Logical next steps include addressing questions such as what are the differences in uptake rates from different sized Ag NPs or Ag NPs capped with different agents (again, holding environmental conditions constant). What is the effect of adding NOM on the rate constant or systematically changing other environmental conditions? How do rate constants in any one of these conditions differ among species or types of organisms? By systematically addressing a series of such questions a unified quantitative vision of the interconnections among these considerations could be developed. This will take a substantial body of work, of course; but the protocols are known and the experiments are relatively short. The benefits of addressing bioavailability in a systematic way are justified by the successes and failures with studying other contaminants (e.g. Wang et al., 1996; Luoma and Rainbow, 2005; Luoma and Rainbow, 2008).

4.1.2.2. Influence of environmental conditions. Navarro et al. (2008a) also emphasized the importance of understanding the chemical nature of the exposure medium in determining Ag NP bioavailability. As noted earlier, pH, ionic strength and composition, NOM, temperature, and nanoparticle concentration all interact to affect aggregation or stabilisation of Ag NPs. Solubility determines the proportional exposure of organisms to Ag^0, Ag^+ or complexed Ag. For example, thermodynamics would generally indicate that NPs of Ag^0 are not equilibrium species and will not persist in aquatic environments containing dissolved oxygen (Liu and Hurt, 2010), although we do not have relevant data on kinetic of loss but these kinetics of dissolution at near neutral pH are likely to be slow. It takes at least 6 days and perhaps as long as several months for complete dissolution of a 5 nm Ag NP, in oxidised conditions (Liu and Hurt, 2010). Where inputs are continuous and hydrodynamic processes like advection, deposition and resuspension are operative, some steady state concentration of the Ag NPs is likely in the water column even in the absence of thermodynamic persistence. This opens up transport pathways like aggregation and settling to the sediments (where oxygen may be absent) and exposure of organisms to increased concentrations of both aggregated and dispersed particles (Liu and Hurt, 2010).

Aggregation determines the particle size of Ag NP to which organisms are exposed and influences which dose metric needs to be quantified in exposure. The paucity of data actually testing the influence on bioavailability of exposure medium chemistry has led to very different assumptions, or conclusions, about the influence of processes like dissolution and aggregation. For example, Gao et al. (2009) found lower Ag NP toxicity to the freshwater zooplankton *Ceriodaphnia dubia* in Suwanee River waters rich in organic substances compared to low organic waters. They attributed this to a reduced rate of Ag^+ release from the nanoparticle in the presence of organic coatings; in effect a reduction in bioavailability by reduced solubility. Indeed, Liu and Hurt (2010) directly showed a decreased release of Ag^+ when citrate-capped Ag NPs were coated with humic or fulvic acids. However, Gao et al. (2009) and Fabrega et al. (2009a,b) also concluded that toxicity of dispersed Ag NPs to *Ceriodaphnia* and *Pseudomonas* was not simply a function of Ag solubility and lower toxicity was due to the formation of nanoscale surface films on the NP. Navarro et al. (2008a) implied throughout their review of nanoparticle toxicity that aggregation reduced bioavailability and toxicity. They state "the formation of larger aggregates (…) will favour removal of NPs (from the water column) into the sediments and is likely to decrease their bioavailability. In contrast solubilisation will increase their mobility and further the bioavailability of NPs." This conclusion may be valid for algae, and other plants, and it may hold for uptake of dispersed forms of nanoparticles. However, it does not necessarily hold for organisms where additional exposure routes like ingestion of large particles may occur. Ward and Kach (2009) showed that aggregation actually enhances ingestion of polystyrene NPs by marine filter feeders like mussels and oysters. In this study, many filter feeders retained particles less than 1 μm in size with <15% efficiency but are 90% efficient in removing particles >6 μm. From 52 to 64% of aggregated nanoparticles were retained by these animals; but retention was minimal when the animals were exposed to dispersed NPs. They concluded that aggregation would increase the bioavailability of NPs to suspension-feeding bivalves. In addition aggregation enhances the rate at which NPs sink to the bottom, where their ingestion by animals that feed on sediments is possible. Working with ZnO nanoparticles, Croteau et al. (2010) showed that when snails ingested aggregated NPs along with diatoms they assimilated, after gut clearance, more than 80% of the Zn in the NPs. Ferry et al. (2009) studied the fate of Au NPs in experimental mesocosms that held a variety of marine species and found Au was most concentrated in biofilms. In addition, filter feeding bivalves accumulated Au to concentrations 10,000 times greater than added to the water. Snails that grazed on the biofilms contained less Au than did the bivalves. Neither mesocosm nor dietary exposure experiments have yet been published using Ag NPs, but data from other NPs suggest that aggregation might reduce bioavailability to organisms and via uptake routes that favour dispersed Ag NPs, while aggregation might favour exposure via ingestion and especially to animals adapted to feed on either media where NPs might be concentrated (e.g. sediments, algal mats or biofilms) or that filter large quantities of water in search of their food (Battin et al., 2009; Fabrega et al., 2009b).

In summary, we are beginning to understand the processes that influence the bioavailability of NPs in general, although much more study is needed to support any broad conclusions specifically for Ag NPs. The nature of the particle and the chemistry of the environment will interact with physico-chemical environmental dynamics to influence the form of Ag and Ag NP present in an environment. These are likely to affect the bioavailability of the Ag and Ag NP, but the characteristics of different biological species and all potential routes of exposure must be considered to adequately predict ecological risks.

4.2. Effects of Ag NPs to aquatic organisms

4.2.1. Toxicity to fish

When the toxicity and interaction of Ag NPs with biota have been examined, they have, in most cases, been compared to either larger (micron sized) Ag particles, similar sized particles not made of Ag or dissolved silver ions (Fabrega et al., 2009b; Lok et al., 2006; Scown et al., 2010).

Ag ion toxicity *in vivo* has been researched in some detail in freshwater fish species (Janes and Playle, 1995; Wood et al., 1996; Zhou et al., 2005) with LC10 values as low as 0.8 μg L^{-1} for certain freshwater fish species (Birge and Zuiderveen, 1995). Ag ions in solution can reach the branchial epithelial cells via the Na^+ channel coupled to the proton ATPase in the apical membrane of the gills, travel to the basolateral membrane of the gill and block the Na^+ K^+ ATPase affecting ionoregulation of Na^+ Cl^- ions across the gills (Bury and Wood, 1999). At high concentrations (μM) there are important physiological consequences such as blood acidosis which can ultimately lead to circulatory collapse and death (Grosell et al., 1999; Hogstrand and Wood, 1998; Morgan et al., 1997; Wood et al., 1996).

Only a handful of studies have investigated *in vivo* the effects of Ag NPs in fish (Bilberg et al., 2010; Chae et al., 2009; Griffitt et al., 2009; Scown et al., 2010; Yeo and Pak, 2008) (Table 4). Initial results indicate that 10–80 nm Ag NPs affect early life stage development that include spinal cord deformities, cardiac arrhythmia and survival

Table 4
Toxic effect of Ag NPs to aquatic invertebrate and vertebrate species and selected examples on prokaryote studies. ND: not determined.

Ag NP									
Organism	Size (nm)	Surface coating	Shape	Synthesis	Nominal conc. or LC50s	Dosing regime	Sample preparation	Major NP effects	Reference
Vertebrates									
Zebrafish embryo	20–30	ND	Spherical	Electrolysis in tap water	10–20 ppt	72 h	Dilution with tap water	Penetration of Ag NP aggregates into skin and circulatory system	Yeo and Yoon (2009)
Zebrafish	10–20	ND	Spherical	Electrolysis in tap water	0.4–4 ppm	2–36 days	Dilution with tap water	Alteration of p53 gene pathway. Defects in fin regeneration and penetration into organelles and cell nucleus	Yeo and Pak (2008)
Zebrafish	26.6 + 8.8	Metal oxide	Spherical	Gas phase condensation	1000 mg L^{-1}	48 h	Sonication in MilliQ water	High binding of Ag NP with gills Distinct gene expression profile between Ag and Ag NP	Griffitt et al. (2009)
Zebrafish	20–30	Sodium citrate	Spherical	Gas phase condensation	LC50 7.07 mg L^{-1}	48 h	Sonication in MilliQ water	Differential toxicity of Ag NPs at different developmental stages overall Ag is more toxic than Ag NPs, except in fish fry stage	Griffitt et al. (2008)
Zebrafish embryo	5–20	BSA or potato starch	Spherical with borohydride	Chemical reduction	5–100 mg L^{-1}	72 h	ND	Deposition in cell nucleus, brain, nervous system and in blood	Asharani et al. (2008)
Zebrafish embryo	11.6 + 3.5	ND	Spherical	Chemical reduction with borohydride	0.19 nM	0–2 h	Washed by centrifugation and incubated in egg water for 120 h	Transport of Ag NPs though chorion channels	Lee et al. (2007)
Zebrafish	3, 10, 50, 100	No coating	Spherical	Citrate/ borohydride	LC50-3 nm 93 μM LC50-10 nm 126 μM LC50-50 nm 127 μM LC50-100 nm 137 μM	120 h	Washed by centrifugation and resuspended in RO water without stabilisers	Size dependent toxicity Morphological aberrations particle size dependent	Bar-Ilan et al. (2009)
Perch	81	PVP	Elliptical/ multifaceted		63–300 μg L^{-1}	2 days	Ag NPs were sonicated, centrifuged and filtered though a 0.22 μm pore filter	Ag NPs bound to gills and decrease tolerance to hypoxic conditions	Bilberg et al. (2010)
Brown trout	10–35	Uncoated	Spherical	Purchased powder	10–100 μg L^{-1}	10 days	Sonication in ultrapure water for 30 min	Size dependent uptake Ag NPs concentrated in gills and liver. Increase of oxidative stress in gills	Scown et al. (2010)
Invertebrates and algae									
Daphnia pulex	20–30	Sodium citrate	Spherical	Gas phase condensation	LC50 0.04 mg L^{-1}	48 h	Sonication in MilliQ water	Low toxicity of Ag NPs compared to Ag ions	Griffitt et al. (2009)
Ceriodaphnia	20–30	Sodium citrate	Spherical	Gas phase condensation	LC50 0.067 mg L^{-1}	48 h	Sonication in MilliQ water	Higher toxicity of Ag NPs compared to Ag ions	Griffitt et al., 2009
Ceriodaphnia dubia	20–30	Metal oxide	Spherical	Gas phase condensation	LC50 0.46 mg L^{-1} LC50 OM 6.18 mg L^{-1}	48 h	Addition of NPs in media, shake horizontally and filtered to use filtrate to remove large aggregates	Increase in organic matter decreases Ag NP toxicity	Gao et al. (2009)
Pseudokirchneriella subcapitata	20–30	Sodium citrate	Spherical	Gas phase condensation	LC50 0.19 mg L^{-1}	96 h	Sonication in MilliQ water	Low toxicity of Ag NPs compared to Ag ions	Griffitt et al., 2009
Chlamydomonas reinhardtii	25 + 13	Carbonate coated	Spherical	ND	EC501h: 3300 nM EC50 5 h 829 nM	1–5 h	Aqueous suspension	Toxicity of Ag NPs mediated by Ag ions released from Ag NP in contact with cell	Navarro et al. (2008a,b)

Table 4 (*continued*)

Ag NP									
Organism	Size (nm)	Surface coating	Shape	Synthesis	Nominal conc. or LC50s	Dosing regime	Sample preparation	Major NP effects	Reference
Invertebrates and algae									
Thalassiosira weissflogii	60–70	PVP	ND	ND	0.02 to 0.0002 nM	48 h	Filtered though a 0.22 μm pore size filter	Release of Ag ions from Ag NPs reduced cell growth, photosynthesis and chlorophyll production	Miao et al. (2009)
Paramecium caudatum	30–40	Tween 80, PEG35000 or PVP 360	Spherical	Modified Tollens process Chemical reduction of [Ag (NH3)2]+ with D-maltose	LC50NP 39 mg L^{-1} LC 50 TweenNP 16 mg L^{-1}	1 h	Suspended in MilliQ water	Ag NP toxicity was enhanced when Tween 80 capped	Kvitek et al. (2008)
Caenorhabditis elegans	14–20	ND	ND	ND	0.05–0.5 mg L^{-1}	24–72 h	Dispersed in MilliQ water and sonication for 13 h, stirring for 7 days and filtered 100 nm	Reduced reproductive success. Increase in oxidative stress Ag NPs accumulated around uterine area	Roh et al. (2009)
Prokaryotes									
MetPlate-Bacterial bioassay	20–30	Metal oxide	Spherical	Gas phase condensation	LC50 47 μg L LC50OM 112 μg L	1.5 h	Shake in aqueous media Filtration to remove aggregates	An increase in organic decreases Ag NP toxicity	Gao et al. (2009)
Bacteria spp	26	PVPs, PEGs, Tween, non-ionic surfactants from Brij group	Spherical	Modified Tollens process. Chemical reduction of [Ag (NH3)2]+ with D-maltose	MIC range of 1.69 to 6.75 μg mL^{-1}	24 h	Aqueous dispersions	SDS, Tween 80 and PVP360 increased particle stabilisation as well as antibacterial activity of Ag NPs	Kvitek et al. (2008)
Bacteria spp	16 + 8	ND	Cuboctahedral, multiple twinned icosahedral and decahedral	Purchased NPs powder in a carbon matrix	0–100 μg mL^{-1}	30 min	Aqueous dispersion a and homogenate with ultrasonic cleaner	Ag Nps < 10 nm attached to bacterial cells. NPs with a high reactivity facet {111} were the most toxic	Morones et al. (2005)
Bacteria spp	Oct-15	ND	ND	Chemical reduction by D-glucose and hydrazine	5–35 μg mL^{-1}	24 h		Ag NPs are more effective in gram negative than in gram positive bacteria	Shrivastava et al. (2007)
E. coli	10	ND	Spherical and truncated	Chemical reduction with formaldehyde, hydrazing and sodium formal-dehydesulfoxylate	0.1–1 mg L^{-1}	24 h	Dispersed in culture media	Cell membrane/ protein damage. No DNA damage	Hwang et al. (2008)
E. coli	From 39	Citrate	Rod truncated, triangular and spherical	*Spherical*: chemical synth. by borohydride reduction *Trunc. triang NPs*: solution phase Synteh.	0.1–10 μg mL^{-1}	0–26 h	Aqueous suspension	Truncated triangular NPs have a higher biocidal capacity than others	Pal et al (2007)
E. coli	9.3 + 2.8	Citrate	Spherical	Chemical synthesis by borohydride reduction	0.4–0.8 nM	30 min	Dilution in biological media (Hepes buffer and M9 medium)	Ag NPs are more toxic than Ag ions. Destabilisation of outer membrane, collapse of plasma memb. potential	Lok et al. (2006)
E. coli	9.3 + 2.8	Citrate	Spherical	Chemical synthesis by borohydride reduction	0–100 μg mL^{-1}	24 h		Ag NP toxicity mediated by chemisorbed Ag ions from the NP. Thus, smaller NPs are more toxic than larger ones due to volume of oxidised surfaces and release of Ag ions	Lok et al. (2006)

(*continued on next page*)

Table 4 (*continued*)

Ag NP									
Organism	Size (nm)	Surface coating	Shape	Synthesis	Nominal conc. or LC50s	Dosing regime	Sample preparation	Major NP effects	Reference
Prokaryotes									
E. coli	12	Daxad 19	ND	Chemical synthesis with ascorbic acid	0–100 μg mL^{-1}	10 h	Sonication in aqueous dispersion	Ag NP created 'pits' in the bacterial cell wall	Sondi and Salopek-Sondi (2004)
Nitrifying bacteria	21–21	PVA	ND	Chemical reduction with borohydride	0.05–1 mg L^{-1}	180 days	Freshly synthesised suspensions	Growth inhibition correlated with Ag NPs<5 nm due to generation of intracellular ROS	Choi et al. (2008)
Autotrophic nitrifying bacteria	14 + 6	PVA	ND	Chemical reduction with borohydride	1 mg L^{-1}	>24 h	From synthesis batch	Ag NPs inhibit respiration by ca. 87%, almost twice as much as Ag+ and AgCl. Ag NPs bound to bacterial cells but did not compromise their viability	Choi and Hu (2008)
Nitrifying bacteria	15 + 9	PVA	Ellipsoidal and spherical	Chemical reduction with borohydride	1 mg L^{-1}	18 h	From synthesis batch	The ligand sulfide forms AgxSy complexes or precipitates and reduced Ag NP toxicity by 80%	Choi et al. (2009)
Soil bacterial community	56 + 18.6	ND	ND	Purchased powder	0–1000 μg L^{-1}	30 days	In ultrapure water and sonicated for 5 h for a stock suspension 100 μg L stock was sonicated for 30 min prior exposure	Ag NPs accumulated in the top 3 mm but did not affect the bacterial diversity either in the sediment nor water column	Bradford et al. (2009)
Pseudomonas fluorescens	65 + 30	Citrate	Spherical/ triangular	Purchased powder	0–2000 ppb	24 h	Dispersion in 0.025 mM citrate solution, sonicated for 30 min for 4 days. Diluted in biological media and stirred for 24 h prior exposure	Toxicity of Ag NPs was pH dependent. However, the presence of organic matter mitigated Ag NP toxicity	Fabrega et al. (2009a)
Pseudomonas putida biofilm	65 + 30	Citrate	Spherical/ triangular	Purchased powder	0–2000 ppb	24 h	Dispersion in 0.025 mM citrate solution, sonicated for 30 min for 4 days. Diluted in biological media and stirred for 24 h prior exposure	The presence of organic matter increased uptake of Ag NPs by biofilms. However, toxicity of Ag NP was mitigated with org. matter	Fabrega et al. (2009b)

(Asharani et al., 2008; Yeo and Pak, 2008). Ag NPs can also accumulate in the gills and liver tissue affecting the ability of fish to cope with low oxygen levels and inducing oxidative stress (Bilberg et al., 2010; Scown et al., 2010) (Fig. 2). However, the threshold at which such effects occur is variable among these experiments, even for the same species (Table 4). Such variability may reflect differences in choices of experimental conditions and/or differences in particle behaviour or character that were undefined. In general, juvenile zebrafish and Japanese medaka have shown to be more susceptible to Ag NPs than to equal mass concentrations of $AgNO_3$, at least under conditions that maximize free ion Ag concentrations for the latter. Some authors suggest that the toxicity is unlikely to be attributable to particle dissolution only (Chae et al., 2009; Griffitt et al., 2009; Yeo and Yoon, 2009). Other exposure studies with equal mass of Ag NPs and Ag NO_3 (as low as 10–20 ng L^{-1} for embryonic studies and 1 mg L^{-1} for juveniles) have supported the contention for different mechanisms of action, with differential uptake and transcriptomic responses for Ag NPs compared with Ag NO_3 (Asharani et al., 2008; Yeo and Kang, 2008; Yeo and Pak, 2008). Indeed, a differential uptake of Ag compounds has been shown in zebrafish and rainbow trout: in zebrafish embryos high exposure concentrations (0.4 and 100 mg L^{-1}) show that Ag NP aggregates were incorporated into blood vessels, skin, brain, heart and yolk (Yeo and Yoon, 2009), whereas Ag ions concentrated in organelles, the nucleus and the yolk only (Fig. 2).

4.2.2. Toxicity to invertebrates and algae

There has been extensive research investigating the toxicity of silver ions to aquatic invertebrates and algae. The lowest recorded NOEC values of 0.001 μg L^{-1} (Bielmyer et al., 2002) for *Daphnia* spp, contrast with NOEC of 2 mg L^{-1} and 0.002 mg L^{-1} for freshwater and seawater algae, respectively (Ratte, 1999), at least partly reflecting differences in ecotoxicological protocols. Survival and reproduction are also more

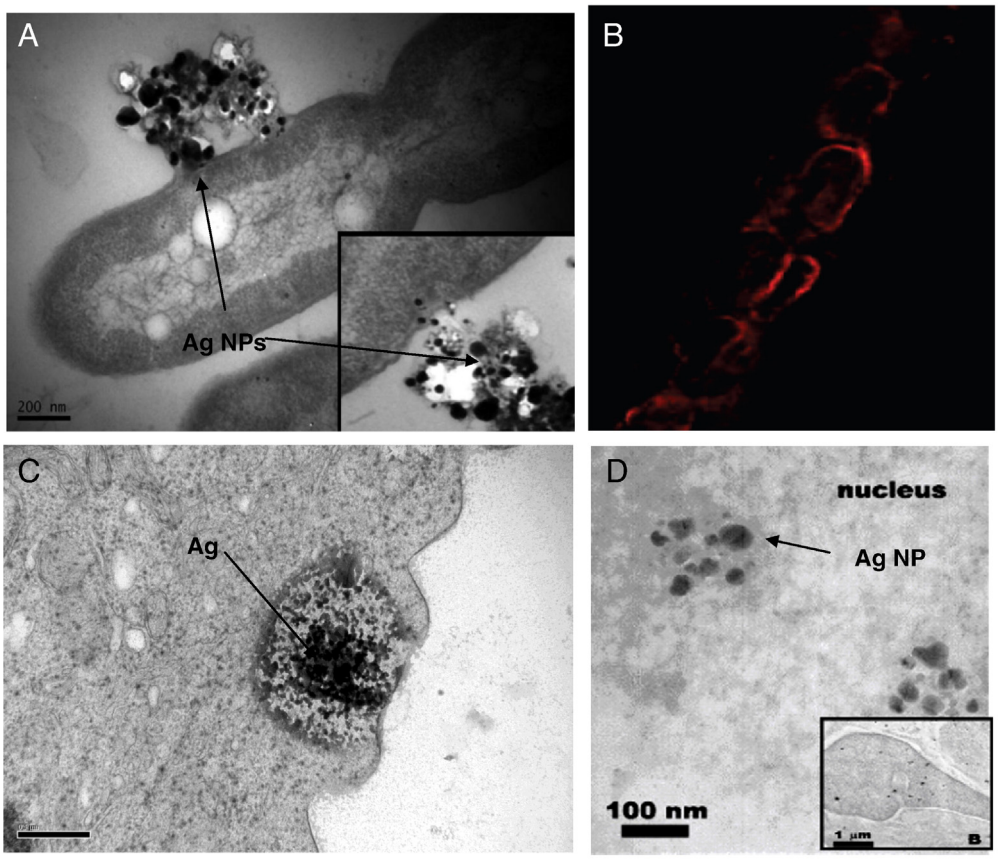

Fig. 2. Micrographs of *in vivo* uptake of Ag NPs by different groups of organisms. A) TEM image of Ag NPs being taken up by the prokaryote *Pseudomonas putida* after a 24 h exposure of 2 mg L^{-1} suspension of Ag NPs with 10 mg L^{-1} humic substances (Fabrega et al., 2009b). B) Dark field image of Ag NPs in the nematode *Caenorhabditis elegans* uterus after a 24 h exposure to 0.5 mg L^{-1} of Ag NPs (Roh et al., 2009). C) TEM image of gill tissue dissected from rainbow trout after a 10 day waterborne exposure to 100 µg L^{-1} Ag NP suspension (Scown et al., 2010), and D) TEM images of BSA-Ag NPs deposited in the cell and nucleus near the tail and trunk of zebrafish embryos treated with 25 µg L^{-1} BSA-Ag NPs (Asharani et al., 2008).

affected when invertebrates are exposed to ionic silver via a phytoplankton diet, rather than by a waterborne exposure (Bielmyer et al., 2006). However, very little research has been done on Ag NPs in this group of organisms. A small number of publications have investigated the effects of Ag NPs on algal growth and photosynthesis (Miao et al., 2009; Navarro et al., 2008b) (Table 4), where Ag NPs were not found to be toxic at concentrations that might be expected in contaminated water bodies to either the freshwater *Chlamydomonas reinhardtii* or the marine diatom *Thalassiosira weissflogii*, with mainly Ag NPs contributing to the observed toxicity due to the release of silver ions. However, in the study with the freshwater algae *C. reinhardtii* Ag NPs appeared to be much more toxic than silver ions when compared to equal mass of silver ions, indicating a potential NP-mediated effect due to the interaction of the NP with the algae cell (Navarro et al., 2008b).

In the case of aquatic invertebrates, some of the data available shows Ag having an enhanced toxicity to invertebrates if present as a NP (Griffitt et al., 2008; Roh et al., 2009), whereas other demonstrate Ag NPs to be less toxic than Ag ions (Kvitek et al., 2009). Indeed, the mode of action of Ag NPs on *Caenorhabditis elegans* differs from their soluble counterpart, with the NPs affecting reproduction potential and inducing high levels of oxidative stress (Roh et al., 2009) (Table 4).

Some of the research on invertebrate species has also shown how the type of capping of the Ag NP, ionic strength and concentration of organic carbon of the biological media are crucial for predicting and understanding toxicity. For instance, Ag NPs capped with the non ionic surfactant Tween 80 increased stability and toxicity of Ag NPs to the ciliate *Paramecium caudatum* (Kvitek et al., 2009) (Table 4). These studies point out that toxicity from Ag NPs is possible, but the wide range of outcomes emphasizes the importance of further attention to experimental details like understanding particle character before and during the experiments.

4.2.3. Toxicity to microbes

Silver toxicity to microbes has been known for centuries and it is related to the interaction of Ag ions with thiol groups of vital enzymes and proteins, effecting cellular respiration and transport of ions across membranes, with ultimate cell death (Luoma, 2008; Ratte, 1999). Due to the medical interest in silver products for combating antibiotic resistant species in hospital, the toxicity of Ag NPs to microbes has been more thoroughly investigated than invertebrate and vertebrate species (Table 4). Nevertheless, mechanisms of toxicity are not well defined; nor is dose–response under different circumstances. Several studies suggest that NP size and shape have key roles in determining toxicity (Choi and Hu, 2008; Griffitt et al., 2009; Morones et al., 2005; Pal et al., 2007; Sondi and Salopek-Sondi, 2004), whereas others have suggested that it is the dissolution of ionic Ag from the NP which is responsible for its bactericidal effect (Lok et al., 2007; Navarro et al., 2008b). Direct interaction of particles with cell membranes and Ag-generated free radicals might affect regulation and transport though the membrane and has been associated to the formation of 'pits' in Ag NP treated *E. coli* cells (Amro et al., 2000; Kim et al., 2007; Sondi and Salopek-Sondi, 2004) and bacterial accumulation of intracellular ROS (Choi and Hu, 2008).

The large numbers of physiological, anatomical and behavioural variations among bacterial strains create difficulties when investigating the mode of action of the Ag NP. Kim et al. (2007) found that gram positive bacteria were considerably more resistant than gram negative to 12 nm Ag NPs, while Yoon et al. (2007) found the opposite for 40 nm

Ag NPs. Both studies investigated the effects in bacteria growing on agar plates and supplemented with NPs, although the differences could have been the result of the particle size used and differences on the type of synthesis and possibly undefined capping agents. Furthermore, a later study by Ruparelia et al. (2008) on *E. coli* and *S. aureus* species of 3 nm Ag NPs but with a variety of strains shows how toxicity was different for each strain tested, without a clear pattern relating to the type of membrane.

Proteomic approaches using *E. coli* have also been used for investigating the possible biological mechanisms of Ag NPs and to discriminate their effects from that of Ag^+ (Hwang et al., 2008; Lok et al., 2006), with results indicating alteration of expression of envelope and heat shock proteins, affecting membrane potential and culminating in the loss of cell viability (Lok et al., 2006). Exposure to Ag NPs strongly induced the *SodA* promoter, suggesting the production of superoxide radicals, ultimately showing an effect via membrane and oxidative stress damage, but not affecting DNA (Hwang et al., 2008). Mechanisms of toxicity of Ag NPs and Ag^+ show some similarities. Yet, comparisons of their efficiencies as antimicrobials are contradictory (Lok et al., 2007) but are not especially relevant because the value of the Ag NPs lies in applications that cannot be achieved with the Ag ion. The major implication of Ag NP released to the environment may be the potential impact on bacteria essential for biogeochemical cycling and other 'environmental services'. Exposure of natural bacterial communities of microorganisms to Ag NPs is likely in surface waters and wastewater treatment plants (Blaser et al., 2008; Boxall et al., 2007), yet little research has been done on Ag or Ag NPs and natural bacterial communities. From the work performed, there are indications that accumulation in waters is prone to affect the community structure and function of bacterial assemblages (Choi et al., 2008; Choi and Hu, 2008) (Table 4). Ag ions have been shown to affect a natural bacterial community of sewage sludge, showing an overall reduction on its denitrifying activity, but selecting and increasing the diversity of organisms able to denitrify (Throback et al., 2007). With Ag NPs, a concentration of 1 mg L^{-1} have been shown to be much more effective on suppressing growth of autotrophic nitrifying bacteria of a wastewater treatment plant community, when compared to the inhibitory effects exerted by Ag ions and silver chloride salts (Choi and Hu, 2008). Ag NPs had a stronger affinity for suppressing autotrophic organisms, whereas silver ions affected heterotrophic species (Choi et al., 2008). However, a 30 day exposure to elevated concentrations of Ag NPs (25–1000 μg L^{-1}) had no impact on estuarine sediment bacterial assemblages and did not affect species diversity and/or abundance of microorganisms in the water column (Bradford et al., 2009). The lack of short term toxicity could be due to the high concentration of chloride ions or organic matter mitigating any bactericidal action due to the formation of a film coatings on the NP, as seen in other studies (Baalousha et al., 2008; Diegoli et al., 2008; Fabrega et al., 2009a,b) (Fig. 2).

If Ag NPs affect natural bacterial communities at concentrations feasible in nature or in waste waters, stringent regulations of Ag NPs entering waterways may be required. Nitrifying and denitrifying microorganisms are crucial not only in nutrient cycling in nature but also in current wastewater treatment, and suppression of species able to carry on this role could impede treatment plant efficiency.

4.3. Physicochemistry and modes of action of Ag NP

Knowledge on nanoparticle physicochemistry, as well as biotic and abiotic factors affecting NP behaviour over time, is necessary for the fuller understanding of the mode of action of Ag NPs to cells. Indeed, initial results have shown a size and shape dependent interaction with prokaryotic organisms, with small (<10 nm) and truncated Ag NPs being the particles most likely to be taken up by microorganisms and affect cellular viability (Choi et al., 2008; Choi and Hu, 2008; Morones et al., 2005; Shrivastava et al., 2007; Sondi and Salopek-Sondi, 2004). Other sizes and shapes appear to be less damaging to prokaryotes, suggesting that largely unreported differences in shape and aggregate size could be responsible for some of the variability in observed toxicity, as metal composition remains the same. Truncated Ag NPs contain a high percentage of the {111} lattice plane as the basal plane (Morones et al., 2005; Pal et al., 2007), which has a relatively higher reactivity of the NP, compared to round- and rod-shaped Ag NPs. There have been several studies examining the differential uptake and toxicity of different sized Ag NPs, with 10 nm Ag NPs having a greater propensity to associate to fish gills and accumulate in liver in comparison to larger sized Ag NPs (Bar-Ilan et al., 2009; Scown et al., 2010). A specific shape–toxicity relationship has also been described by other authors. Indeed, dendritic Ni NPs have a higher toxicity than spherical Ni NPs to zebrafish embryos, however both shapes targeted the same organs, indicating a similar route of entry (Ispas et al., 2009).

The role of Ag NP solubility has also generated considerable interest when characterising Ag NPs physicochemically. Under oxidised conditions chemisorbed Ag ions are formed from the Ag NP (Henglein, 1993; Henglein, 1998), leading to a small but constant release of Ag ions in solution (Hwang et al., 2008; Lok et al., 2007; Miao et al., 2009; Navarro et al., 2008b), most likely dependent on synthesis and capping agent. The degree of particle solubilisation is crucial in order to discriminate the potential effects exerted by the NP form the soluble fraction of it. Yet, initial characterisations of Ag NPs have determined a low solubility in aqueous suspensions, generally being of <2% over relevant exposure periods (Fabrega et al., 2009a; Griffitt et al., 2008; Navarro et al., 2008a,b), and a concentration significantly lower than the one required to cause the observed effects, suggesting a NP-mediated uptake and/or toxicity (Fabrega et al., 2009a; Griffitt et al., 2009). Nevertheless, a few studies have speculated that NP solubility can be increased by the presence of organisms and their contact with the NP, as a result affecting the percentage of solubilised Ag NP to the quantified <2 % prior exposure to microorganisms (Fabrega et al., 2009a; Lok et al., 2006; Lok et al., 2007; Navarro et al., 2008b). This increased release of dissolved silver from the Ag NP as a result of the organism contact with the NP has been shown in a study investigating the inhibitory effects of Ag NPs on photosynthesis to the green algae *C. reinhardtii* (Navarro et al., 2008b).

5. Conclusions and recommendations

The use of nanomaterials and their potential environmental and human health risks (Andujar et al., 2009; Helfenstein et al., 2008) are of increasing concern and social debate (Dean, 2009; Feder, 2006); (RS/RAE, 2004) and have been the subject of many government reports. This review has outlined the current knowledge and gaps on Ag NP as a potential problem for environmental health. With the existing information we identify the current research gaps and needed areas of research:

1. There is a pressing need to develop analytical and metrological methods which can detect, quantify and characterise Ag NPs under ambient conditions. Such data will strongly inform both exposure and hazard studies.
2. Improved hazard data is required. Significant improvements in understanding dose, physicochemical properties, biouptake and toxicity processes need to be made. In addition, consistent use of appropriate dissolved and bulk Ag controls should be included in all toxicity studies.
3. Assessing the potential harm of Ag NPs in aquatic environments requires well characterised Ag NPs and to study Ag NPs in a well dispersed state to identify nano related effects. Equally, however, studies on commercially relevant preparations of Ag NPs are needed to better understand environmentally realistic exposure scenarios (that include aggregation etc.) and their biological

effects, as this will produce pragmatic data useful for understanding the current risks.

4. Better information is needed on current usage and release rates of dissolved and nanoparticulate silver from consumer products and from industrial processed. Ideally, this information needs to be integrated into readily accessible models.
5. Advancement of models for use in studies on Ag NPs (and other NPs). Models that can be adapted for this purpose derive from studies on other environmental pollutants, in areas of exposure (Blaser et al, 2008; Mueller and Nowack, 2008), bioavailability (biodynamics, Luoma and Rainbow, 2005), toxicity (BLM, Paquin et al., 2002) and structure activity relationships (QSAR, Puzyn et al., 2009). Such models need to be challenged with appropriate high quality data and modified to account for any 'nano-specific' effects. This will be a continuing and iterative process, but with the provision of high quality data in the areas highlighted earlier, this should allow improvements in models to be effects rapidly.

References

Adams NWH, Kramer JR. Reactivity of Ag+ ion with thiol ligands in the presence of iron sulfide. Environ Toxicol Chem 1998;17:625–9.

Ahmad A, Mukherjee P, Senapati S, Mandal D, Khan MI, Kumar R, et al. Extracellular biosynthesis of silver nanoparticles using the fungus *Fusarium oxysporum*. Colloids Surf B Biointerfaces 2003;28:313.

Alvarez PJJ, Colvin V, Lead J, Stone V. Research priorities to advance eco-responsible nanotechnology. ACS Nano 2009;3:1616–9.

Amro NA, Kotra LP, Wadu-Mesthrige K, Bulychev A, Mobashery S, Liu G-Y. High-resolution atomic force microscopy studies of the *Escherichia coli* outer membrane: structural basis for permeability. Langmuir 2000;16:2789–96.

Andujar P, Lanone S, Brochard P, Boczkowski J. Respiratory effects of manufactured nanoparticles. Rev Mal Respir 2009;26:625–37.

Asharani PV, Wu YL, Gong ZY, Valiyaveettil S. Toxicity of silver nanoparticles in zebrafish models. Nanotechnology 2008;19.

Baalousha M. Aggregation and disaggregation of iron oxide nanoparticles: influence of particle concentration, pH and natural organic matter. Sci Total Environ 2009;407: 2093–101.

Baalousha M, Manciulea A, Cumberland S, Kendall K, Lead JR. Aggregation and surface properties of iron oxide nanoparticles: influence of pH and natural organic matter. Environ Toxicol Chem 2008;27:1875–82.

Bar H, Bhui DK, Sahoo GR, Sarkar P, De SR, Misra A. Green synthesis of silver nanoparticles using latex of *Jatropha curcas*. Colloids Surf Physicochemical Eng Aspects 2009;339:134–9.

Bar-Ilan O, Albrecht RM, Fako VE, Furgeson DY. Toxicity assessments of multisized gold and silver nanoparticles in zebrafish embryos. Small 2009;5:1897–910.

Barnett BP, Arepally A, Karmarkar PV, Qian D, Gilson WD, Walczak P, et al. Magnetic resonance-guided, real-time targeted delivery and imaging of magnetocapsules immunoprotecting pancreatic islet cells. Nat Med 2007;13:986–91.

Battin TJ, Kammer FVD, Weilhartner A, Ottofuelling S, Hofmann T. Nanostructured TiO2: transport behavior and effects on aquatic microbial communities under environmental conditions. Environ Sci Technol 2009;43:8098–104.

Benn TM, Westerhoff P. Nanoparticle silver released into water from commercially available sock fabrics. Environ Sci Technol 2008;42:4133–9.

Bianchini A, Wood CM. Does sulfide or water hardness protect against chronic silver toxicity in *Daphnia magna*? A critical assessment of the acute-to-chronic toxicity ratio for silver. Ecotoxicol Environ Saf 2008;71:32–40.

Bianchini A, Bowles KC, Brauner CJ, Gorsuch JW, Kramer JR, Wood CM. Evaluation of the effects of reactive sulfide on the acute toxicity of silver (i) to *Daphnia magna*. Part 2: Toxic results. Environ Toxicol Chem 2002;21:1294–300.

Bielmyer GK, Bell RA, Klaine SJ. Effects of ligand-bound silver on *Ceriodaphnia dubia*. Environ Toxicol Chem 2002;21:2204–8.

Bielmyer GK, Grosell M, Brix KV. Toxicity of silver, zinc, copper, and nickel to the copepod *Acartia tonsa* exposed via a phytoplankton diet. Environ Sci Technol 2006;40:2063–8.

Bilberg K, Malte H, Wang T, Baatrup E. Silver nanoparticles and silver nitrate cause respiratory stress in Eurasian perch (*Perca fluviatilis*). Aquat Toxicol 2010;96: 159–65.

Birge W, Zuiderveen J. The comparative toxicity of silver to aquatic biota. Proceedings, 3rd Argentum International Conference on the Transport, Fate, and Effects of Silver in the Environment; 1995. Washington, DC.

Birla SS, Tiwari VV, Gade AK, Ingle AP, Yadav AP, Rai MK. Fabrication of silver nanoparticles by *Phoma glomerata* and its combined effect against *Escherichia coli*, *Pseudomonas aeruginosa* and *Staphylococcus aureus*. Lett Appl Microbiol 2009;48: 173–9.

Blaser SA, Scheringer M, MacLeod M, Hungerbühler K. Estimation of cumulative aquatic exposure and risk due to silver: contribution of nano-functionalized plastics and textiles. Sci Total Environ 2008;390:396–409.

Boxall AB, Tiede K, Chaudhry Q. Engineered nanomaterials in soils and water: how do they behave and could they pose a risk to human health? Nanomedicine 2007;2: 919–27.

Boxall A, Chaudhry Q, Jones A, Jefferson B, Watts C. Current and future predicted environmental exposure to engineered nanoparticles: report to Defra; 2008.

Boyer C, Whittaker MR, Bulmus V, Liu J, Davis TP. The design and utility of polymer-stabilized iron-oxide nanoparticles for nanomedicine applications. NPG Asia Mater 2010;2:23–30.

Bradford A, Handy RD, Readman JW, Atfield A, Muhling M. Impact of silver nanoparticle contamination on the genetic diversity of natural bacterial assemblages in estuarine sediments. Environ Sci Technol 2009;43:4530–6.

Bury NR, Wood CM. Mechanism of branchial apical silver uptake by rainbow trout is via the proton-coupled Na+ channel. Am J Physiol Regul Integr Comp Physiol 1999;277:R1385–91.

Callegari A, Tonti D, Chergui M. Photochemically grown silver nanoparticles with wavelength-controlled size and shape. Nano Lett 2003;3:1565–8.

Campbell PGC. Interaction between trace metals and aquatic organisms: a critique of the free-ion activity model. In: Tessier A, Turner DR, editors. In metal speciation and aquatic systems. New York: Wiley; 1995.

Capek I. Preparation of metal nanoparticles in water-in-oil (w/o) microemulsions. Adv Colloid Interface Sci 2004;110:49–74.

Cedervall T, Lynch I, Lindman S, BerggÃ¥rd T, Thulin E, Nilsson H, et al. Understanding the nanoparticle–protein corona using methods to quantify exchange rates and affinities of proteins for nanoparticles. Proc Natl Acad Sci 2007;104:2050–5.

Chae YJ, Pham CH, Lee J, Bae E, Yi J, Gu MB. Evaluation of the toxic impact of silver nanoparticles on Japanese medaka (*Oryzias latipes*). Aquat Toxicol 2009;94:320–7.

Choi O, Hu ZQ. Size dependent and reactive oxygen species related nanosilver toxicity to nitrifying bacteria. Environ Sci Technol 2008;42:4583–8.

Choi O, Deng KK, Kim NJ, Ross L, Surampalli RY, Hu ZQ. The inhibitory effects of silver nanoparticles, silver ions, and silver chloride colloids on microbial growth. Water Res 2008;42:3066–74.

Choi O, Cleuenger TE, Deng BL, Surampalli RY, Ross L, Hu ZQ. Role of sulfide and ligand strength in controlling nanosilver toxicity. Water Res 2009;43(7):1879–86.

Christian P. Nanomaterials: properties, preparation and applications. In: Lead J, Smith E, editors. Environmental and human health impacts of nanotechnology. Chicester: Wiley-Blackwell; 2009.

Croteau M-Nl, Dybowska AD, Luoma SN, Valsami-Jones E. A novel approach reveals that zinc oxide nanoparticles are bioavailable and toxic after dietary exposures. Nanotoxicology 2010;0(0):1-12.

De Schamphelaere KAC, Janssen CR. Bioavailability and chronic toxicity of zinc to juvenile rainbow trout (*Oncorhynchus mykiss*): comparison with other fish species and development of a biotic ligand model. Environ Sci Technol 2004;38:6201–9.

Dean C. Nanomaterials under study by the E.P.A. The New York Times: 2009.

Diegoli S, Manciulea AL, Begum S, Jones IP, Lead JR, Preece JA. Interaction between manufactured gold nanoparticles and naturally occurring organic macromolecules. Sci Total Environ 2008;402:51–61.

Domingos RF, Baalousha MA, Ju-Nam Y, Reid MM, Tufenkji N, Lead JR, et al. Characterizing manufactured nanoparticles in the environment: multimethod determination of particle sizes. Environ Sci Technol 2009;43:7277–84.

Dong Y, Feng S-S. In vitro and in vivo evaluation of methoxy polyethylene glycol-polylactide (mpeg-pla) nanoparticles for small-molecule drug chemotherapy. Biomaterials 2007;28:4154–60.

Duran N, Marcato P, Alves O, De Souza G, Esposito E. Mechanistic aspects of biosynthesis of silver nanoparticles by several *Fusarium oxysporum* strains. J Nanobiotechnol 2005;3:8.

Dybowska AD, Croteau M-N, Misra SK, Berhanu D, Luoma SN, Christian P, et al. Synthesis of isotopically modified ZnO nanoparticles and their potential as nanotoxicity tracers. Environ Pollut 2011;159(1):266–73.

Erickson RJ, Brooke LT, Kahl MD, Vende Venter F, Harting SL, Markee TP, et al. Effects of laboratory test conditions on the toxicity of silver to aquatic organisms. Environ Toxicol Chem 1998;17:572–8.

Fabrega J, Fawcett SR, Renshaw JC, Lead JR. Silver nanoparticle impact on bacterial growth: effect of pH, concentration, and organic matter. Environ Sci Technol 2009a;43:7285–90.

Fabrega J, Renshaw JC, Lead JR. Interactions of silver nanoparticles with *Pseudomonas putida* biofilms. Environ Sci Technol 2009b;43:9004–9.

Feder B. Technology's future: a look at the dark side. The New York Times; 2006.

Ferry JL, Craig P, Hexel C, Sisco P, Frey R, Pennington PL, et al. Transfer of gold nanoparticles from the water column to the estuarine food web. Nat Nanotechnol 2009;4:441–4.

Fisher NS, Wang WX. Trophic transfer of silver to marine herbivores: a review of recent studies. Environ Toxicol Chem 1998;17:562–71.

Frattini A, Pellegri N, Nicastro D, Sanctis OD. Effect of amine groups in the synthesis of Ag nanoparticles using aminosilanes. Mater Chem Phys 2005;94:148–52.

Gao J, Youn S, Hovsepyan A, Llaneza VL, Wang Y, Bitton G, et al. Dispersion and toxicity of selected manufactured nanomaterials in natural river water samples: effects of water chemical composition. Environ Sci Technol 2009;43:3322–8.

Geranio L, Heuberger M, Nowack B. The behavior of silver nanotextiles during washing. Environ Sci Technol 2009;43:8113–8.

Gottschalk F, Sonderer T, Scholz RW, Nowack B. Modeled environmental concentrations of engineered nanomaterials (TiO2, ZnO, Ag, CNT, fullerenes) for different regions. Environ Sci Technol 2009;43(24):9216–22.

Griffitt RJ, Luo J, Gao J, Bonzongo JC, Barber DS. Effects of particle composition and species on toxicity of metallic nanomaterials in aquatic organisms. Environ Toxicol Chem 2008;27:1972–8.

Griffitt RJ, Hyndman K, Denslow ND, Barber DS. Comparison of molecular and histological changes in zebrafish gills exposed to metallic nanoparticles. Toxicol Sci 2009;107:404–15.

Grosell M, De Boeck G, Johannsson O, Wood CM. The effects of silver on intestinal ion and acid–base regulation in the marine teleost fish, *Papophrys vetulus*. Comp Biochem Physiol C Toxicol Pharmacol 1999;124:259–70.

Handy RD, von der Kammer F, Lead JR, Hassellov M, Owen R, Crane M. The ecotoxicology and chemistry of manufactured nanoparticles. Ecotoxicology 2008;17:287–314.
Hassellov M, Readman JW, Ranville JF, Tiede K. Nanoparticle analysis and characterization methodologies in environmental risk assessment of engineered nanoparticles. Ecotoxicology 2008;17:344–61.
Helfenstein M, Miragoli M, Rohr S, Muller L, Wick P, Mohr M, et al. Effects of combustion-derived ultrafine particles and manufactured nanoparticles on heart cells in vitro. Toxicology 2008;253:70–8.
Henglein A. Physicochemical properties of small metal particles in solution-microelectrode reactions, chemisorption, composite metal particles, and the atom-to-atom metal transition. J Phys Chem 1993;97:5457–71.
Henglein A. Colloidal silver nanoparticles: photochemical preparation and interaction with o2, ccl4, and some metal ions. Chem Mater 1998;10:444–50.
Hill WR. Argyria: the pharmacology of silver. South Med J 1941;34:340.
Hogstrand C, Wood CM. Toward a better understanding of the bioavailability, physiology and toxicity of silver in fish: implications for water quality criteria. Environ Toxicol Chem 1998;17:547–61.
Huang HH, Ni XP, Loy GL, Chew CH, Tan KL, Loh FC, et al. Photochemical formation of silver nanoparticles in poly(n-vinylpyrrolidone). Langmuir 1996;12:909–12.
Hwang ET, Lee JH, Chae YJ, Kim YS, Kim BC, Sang BI, et al. Analysis of the toxic mode of action of silver nanoparticles using stress-specific bioluminescent bacteria. Small 2008;4:746–50.
Ingle A, Gade A, Pierrat S, Sonnichsen C, Rai M. Mycosynthesis of silver nanoparticles using the fungus *Fusarium acuminatum* and its activity against some human pathogenic bacteria. Curr Nanosci 2008;4:141–4.
Ispas C, Andreescu D, Patel A, Goia DV, Andreescu S, Wallace KN. Toxicity and developmental defects of different sizes and shape nickel nanoparticles in zebrafish. Environ Sci Technol 2009;43:6349–56.
Jain PK, Huang XH, El-Sayed IH, El-Sayed MA. Noble metals on the nanoscale: optical and photothermal properties and some applications in imaging, sensing, biology, and medicine. Acc Chem Res 2008;41:1578–86.
Janes N, Playle RC. Modeling silver-binding to gills of rainbow trout (*Onchorrynchus mykiss*). Environ Toxicol Chem 1995;14:1847–58.
Jiang JK, Oberdorster G, Biswas P. Characterization of size, surface charge, and agglomeration state of nanoparticle dispersions for toxicological studies. J Nanopart Res 2009;11:77–89.
Kachynski AV, Kuzmin AN, Nyk M, Roy I, Prasad PN. Zinc oxide nanocrystals for nonresonant nonlinear optical microscopy in biology and medicine. J Phys Chem C 2008;112:10721–4.
Kaegi R, Ulrich A, Sinnet B, Vonbank R, Wichser A, Zuleeg S, et al. Synthetic TiO2 nanoparticle emission from exterior facades into the aquatic environment. Environ Pollut 2008;156:233–9.
Kapoor S, Lawless D, Kennepohl P, Meisel D, Serpone N. Reduction and aggregation of silver ions in aqueous gelating solutions. Langmuir 1994;10:3018–22.
Kim JS, Kuk E, Yu KN, Kim JH, Park SJ, Lee HJ, et al. Antimicrobial effects of silver nanoparticles. Nanomed Nanotechnol Biol Med 2007;3:95-101.
Klaine SJ, Alvarez PJJ, Batley GE, Fernandes TF, Handy RD, Lyon DY, et al. Nanomaterials in the environment: behavior, fate, bioavailability, and effects. Environ Toxicol Chem 2008;27:1825–51.
Köhler AR, Som C, Helland A, Gottschalk F. Studying the potential release of carbon nanotubes throughout the application life cycle. J Cleaner Prod 2008;16:927–37.
Kvitek L, Panacek A, Soukupova J, Kolar M, Vecerova R, Prucek R, et al. Effect of surfactants and polymers on stability and antibacterial activity of silver nanoparticles (NPs). J Phys Chem C 2008;112(15):5825–34.
Kvitek L, Vanickova M, Panacek A, Soukupova J, Dittrich M, Valentova E, et al. Initial study on the toxicity of silver nanoparticles (nps) against *Paramecium caudatum*. J Phys Chem C 2009;113:4296–300.
Lee KJ, Nallathamby PD, Browning LM, Osgood CJ, Xu XHN. In vivo imaging of transport and biocompatibility of single silver nanoparticles in early development of zebrafish embryos. ACS Nano 2007;1:133–43.
Leeuwen CJV, Vermeire T, Vermeire TG. Risk assessment of chemicals: an introduction. Springer-Verlag; 2007.
Lens M. Use of fullerenes in cosmetics. Recent Pat Biotechnol 2009;3:118–23.
Liu J, Hurt RH. Ion release kinetics and particle persistence in aqueous nano-silver colloids. Environ Sci Technol 2010;44:2169–75.
Lok C, Ho C, Chen R, He Q, Yu W, Sun H, et al. Proteomic analysis of the mode of antibacterial action of silver nanoparticles. J Proteome Res 2006;5:916–24.
Lok CN, Ho CM, Chen R, He QY, Yu WY, Sun H, et al. Silver nanoparticles: partial oxidation and antibacterial activities. J Biol Inorg Chem 2007;12:527–34.
Lundqvist M, Stigler J, Elia G, Lynch I, Cedervall T, Dawson KA. Nanoparticle size and surface properties determine the protein corona with possible implications for biological impacts. Proc Natl Acad Sci 2008;105:14265–70.
Luo C, Zhang Y, Zeng X, Zeng Y, Wang Y. The role of poly(ethylene glycol) in the formation of silver nanoparticles. J Colloid Interface Sci 2005;288:444–8.
Luoma SN. Bioavailability of trace metals to aquatic organisms—a review. Sci Total Environ 1983;28:1-22.
Luoma SN. Silver nanotechnologies and the environment: old problems and new challenges? Washington DC: Woodrow Wilson International Center for Scholars or The PEW Charitable Trusts; 2008.
Luoma SN, Rainbow PS. Why is metal bioaccumulation so variable? Biodynamics as a unifying concept. Environ Sci Technol 2005;39:1921–31.
Luoma SN, Rainbow PS. Metal contamination in aquatic environments: science and lateral management. Cambridge: Cambridge University Press; 2008.
Luoma SN, Ho YB, Bryan GW. Fate, bioavailability and toxicity of silver in estuarine environments. Mar Pollut Bull 1995;31:44–54.
Luoma SN, Fisher N. Uncertainties in assessing contaminant exposure from sediments: bioavailability. In: Ingersoll TD, Biddinger G, editors. In Ecological Risk Assessments of Contaminated Sediments. C. Pensacola, FL.: SETAC Press; 1997, pp 211–39.
Miao A-J, Schwehr KA, Xu C, Zhang S-J, Luo Z, Quigg A, et al. The algal toxicity of silver engineered nanoparticles and detoxification by exopolymeric substances. Environ Pollut 2009;157:3034–41.
Moore MN. Do nanoparticles present ecotoxicological risks for the health of the aquatic environment? Environ Int 2006;32:967–76.
Morgan IJ, Henry RP, Wood CM. The mechanism of acute silver nitrate toxicity in freshwater rainbow trout (*Oncorhynchus mykiss*) is inhibition of gill Na+ and Cl−1 transport. Aquat Toxicol 1997;38:145–63.
Morones JR, Elechiguerra JL, Camacho A, Holt K, Kouri JB, Ramírez JT, et al. The bactericidal effect of silver nanoparticles. Nanotechnology 2005;16:2346–53.
Mueller NC, Nowack B. Exposure modeling of engineered nanoparticles in the environment. Environ Sci Technol 2008;42:4447–53.
Müller RH, Radtke M, Wissing SA. Solid lipid nanoparticles (sln) and nanostructured lipid carriers (nlc) in cosmetic and dermatological preparations. Adv Drug Del Rev 2002;54:S131–55.
Navarro E, Baun A, Behra R, Hartmann NB, Filser J, Miao AJ, et al. Environmental behavior and ecotoxicity of engineered nanoparticles to algae, plants, and fungi. Ecotoxicology 2008a;17:372–86.
Navarro E, Piccapietra F, Wagner B, Marconi F, Kaegi R, Odzak N, et al. Toxicity of silver nanoparticles to *Chlamydomonas reinhardtii*. Environ Sci Technol 2008b;42:8959–64.
Nel A, Xia T, Madler L, Li N. Toxic potential of materials at the nanolevel. Science 2006;311:622–7.
Nel AE, Madler L, Velegol D, Xia T, Hoek EMV, Somasundaran P, et al. Understanding biophysicochemical interactions at the nano-bio interface. Nat Mater 2009;8:543–57.
Nicholson FA, Smith SR, Alloway BJ, Carlton-Smith C, Chambers BJ. An inventory of heavy metals inputs to agricultural soils in England and Wales. Sci Total Environ 2003;311:205–19.
Oberdorster G, Maynard A, Donaldson K, Castranova V, Fitzpatrick J, Ausman K, et al. Principles for characterizing the potential human health effects from exposure to nanomaterials: elements of a screening strategy. Part Fibre Toxicol 2005;2:8.
Pal S, Tak YK, Song JM. Does the antibacterial activity of silver nanoparticles depend on the shape of the nanoparticle? A study of the gram-negative bacterium *Escherichia coli*. Appl Environ Microbiol 2007;73:1712–20.
Paquin PR, Gorsuch JW, Apte S, Batley GE, Bowles KC, Campbell PGC, et al. The biotic ligand model: a historical overview. Comp Biochem Physiol C Toxicol Pharmacol 2002;133(1–2):3-35.
Pastoriza-Santos I, Liz-Marzan LM. Synthesis of silver nanoprisms in DMF. Nano Lett 2002;2:903–5.
Pavasupree S, Ngamsinlapasathian S, Nakajima M, Suzuki Y, Yoshikawa S. Synthesis, characterization, photocatalytic activity and dye-sensitized solar cell performance of nanorods/nanoparticles TiO2 with mesoporous structure. J Photochem Photobiol A 2006;184:163–9.
Perelaer J, Hendriks CE, de Laat AWM, Schubert US. One-step inkjet printing of conductive silver tracks on polymer substrates. Nanotechnology 2009;20.
Purcell TW, Peters JJ. Sources of silver in the environment. Environ Toxicol Chem 1998;17:539–46.
Puzyn T, Leszczynska D, Leszczynski J. Toward the development of "nano-qsars": advances and challenges. Small 2009;5:2494–509.
Ratte HT. Bioaccumulation and toxicity of silver compounds: a review. Environ Toxicol Chem 1999;18:89-108.
Roh JY, Sim SJ, Yi J, Park K, Chung KH, Ryu DY, et al. Ecotoxicity of silver nanoparticles on the soil nematode *Caenorhabditis elegans* using functional ecotoxicogenomics. Environ Sci Technol 2009;43:3933–40.
Rosenman KD, Moss A, Kon S. Argyria: clinical implications of exposure to silver nitrate and silver oxide. J Occup Environ Med 1979;21:430–5.
RS/RAE. Nanosciences and nanotechnologies: opportunities and uncertainties; 2004.
Ruparelia JP, Chatteriee AK, Duttagupta SP, Mukherji S. Strain specificity in antimicrobial activity of silver and copper nanoparticles. Acta Biomater 2008;4:707–16.
Salata OV. Applications of nanoparticles in biology and medicine. J Nanobiotechnol 2004;2:3.
Sanudo-Willhelmy S, Flegal R. Anthropogenic silver in the Southern California bight: a new tracer of sewage in coastal waters. Environ Sci Technol 1992;26:2147–51.
Sawosz E, Binek M, Grodzik M, Zielinska M, Sysa P, Szmidt M, et al. Influence of hydrocolloidal silver nanoparticles on gastrointestinal microflora and morphology of enterocytes of quails. Arch Anim Nutr 2007;61:444–51.
Scown T, Santos E, Johnston B, Gaiser B, Baalousha M, Mitov S, et al. Effects of aqueous exposure to silver nanoparticles of different sizes in rainbow trout. Toxicol Sci 2010;115:521–34.
Sharma VK, Yngard RA, Lin Y. Silver nanoparticles: green synthesis and their antimicrobial activities. Adv Colloid Interface Sci 2009;145:83–96.
Sharpe S, Mackay D. A framework for evaluating bioaccumulation in food webs. Environ Sci Technol 2000;34:2373–9.
Shrivastava S, Bera T, Roy A, Singh G, Ramachandrarao P, Dash D. Characterization of enhanced antibacterial effects of novel silver nanoparticles. J Nanotechnol 2007;18:225103–12.
Silver S. Bacterial silver resistance: molecular biology and uses and misuses of silver compounds. FEMS Microbiol Rev 2003;27:341–53.
Silver S, Phung LT, Silver G. Silver as biocides in burn and wound dressings and bacterial resistance to silver compounds. Annual Meeting of the Society-for-Industrial-Microbiology. Chicago, IL; 2005.

Slaveykova VI, Wilkinson KJ. Predicting the bioavailability of metals and metal complexes: critical review of the biotic ligand model. Environ Chem 2005;2:9-24.
Sondi I, Salopek-Sondi B. Silver nanoparticles as antimicrobial agent: a case study on *E-coli* as a model for gram-negative bacteria. J Colloid Interface Sci 2004;275: 177–82.
Tay BY, Edirisinghe MJ. Dispersion and stability of silver inks. J Mater Sci 2002;V37: 4653.
Throback IN, Johansson M, Rosenquist M, Pell M, Hansson M, Hallin S. Silver (Ag^+) reduces denitrification and induces enrichment of novel nirk genotypes in soil. FEMS Microbiol Lett 2007;270:189–94.
Tiede K, Hassellov M, Breitbarth E, Chaudhry Q, Boxall ABA. Considerations for environmental fate and ecotoxicity testing to support environmental risk assessments for engineered nanoparticles. J Chromatogr A 2009;1216:503–9.
Tungittiplakorn W, Lion LW, Cohen C, Kim JY. Engineered polymeric nanoparticles for soil remediation. Environ Sci Technol 2004;38:1605–10.
Veltman K, Huijbregts MAJ, Kolck MV, Wang W-X, Hendriks AJ. Metal bioaccumulation in aquatic species: quantification of uptake and elimination rate constants using physicochemical properties of metals and physiological characteristics of species. Environ Sci Technol 2008;42:852–8.
Vigneshwaran N, Ashtaputre NM, Varadarajan PV, Nachane RP, Paralikar KM, Balasubramanya RH. Biological synthesis of silver nanoparticles using the fungus *Aspergillus flavus*. Mater Lett 2007;61:1413.
Wang W-X, Fisher NS. Assimilation efficiencies of chemical contaminants in aquatic invertebrates: a synthesis. Environ Toxicol Chem 1999;18:2034–45.
Wang W-X, Fisher NS, Luoma SN. Kinetic determinations of trace element bioaccumulation in the mussel Mytilus eduli. Marine Ecology Progress Series 1996;140:19–113.
Ward JE, Kach DJ. Marine aggregates facilitate ingestion of nanoparticles by suspension-feeding bivalves. Mar Environ Res 2009;68:137–42.
Ward TJ, Kramer JR. Silver speciation during chronic toxicity tests with the mysid, *Americamysis bahia*. Comp Biochem Physiol C Toxicol Pharmacol 2002;133:75–86.
Wei D, Unalan HE, Han DX, Zhang QX, Niu L, Amaratunga G, et al. A solid-state dye-sensitized solar cell based on a novel ionic liquid gel and ZnO nanoparticles on a flexible polymer substrate. Nanotechnology 2008;19.
Wigginton NS, Haus KL, Hochella MF. Aquatic environmental nanoparticles. J Environ Monit 2007;9:1306–16.
Wood CM, Hogstrand C, Galvez F, Munger RS. The physiology of waterborne silver toxicity in freshwater rainbow trout (*Oncorhynchus mykiss*) 1. The effects of ionic Ag+. Aquat Toxicol 1996;35:93.
WoodrowWilson. Consumer products inventory Project on Emerging Nanotechnologies, a project of the Woodrow Wilson International Center for Scholars; 2009.
Wu HP, Liu JF, Wu XJ, Ge MY, Wang YW, Zhang GQ, et al. High conductivity of isotropic conductive adhesives filled with silver nanowires. Int J Adhes Adhes 2006;26: 617–21.
Xu X, Brownlow W, Kyriacou S, Wan Q, Viola J. Real-time probing of membrane transport in living microbial cells using single nanoparticle optics and living cell imaging. Biochemistry 2004;43:10400–13.
Yeo MK, Kang M. Effects of nanometer sized silver materials on biological toxicity during zebrafish embryogenesis. Bull Korean Chem Soc 2008;29:1179–84.
Yeo MK, Pak SW. Exposing zebrafish to silver nanoparticles during caudal fin regeneration disrupts caudal fin growth and p53 signaling. Mol Cell Toxicol 2008;4:311–7.
Yeo MK, Yoon JW. Comparison of the effects of nano-silver antibacterial coatings and silver ions on zebrafish embryogenesis. Mol Cell Toxicol 2009;5:23–31.
Yoon K-Y, Hoon Byeon J, Park J-H, Hwang J. Susceptibility constants of *Escherichia coli* and *Bacillus subtilis* to silver and copper nanoparticles. Sci Total Environ 2007;373:572–5.
Yu DG. Formation of colloidal silver nanoparticles stabilized by Na+-poly(gamma-glutamic acid)–silver nitrate complex via chemical reduction process. Colloids Surf, B 2007;59: 171–8.
Zhang W-X. Nanoscale iron particles for environmental remediation: an overview. J Nanopart Res 2003;5:323–32.
Zhou B, Nichols J, Playle RC, Wood CM. An in vitro biotic ligand model (BLM) for silver binding to cultured gill epithelia of freshwater rainbow trout (*Oncorhynchus mykiss*). Toxicol Appl Pharmacol 2005;202:25.